RANGER AIR USER MANUAL

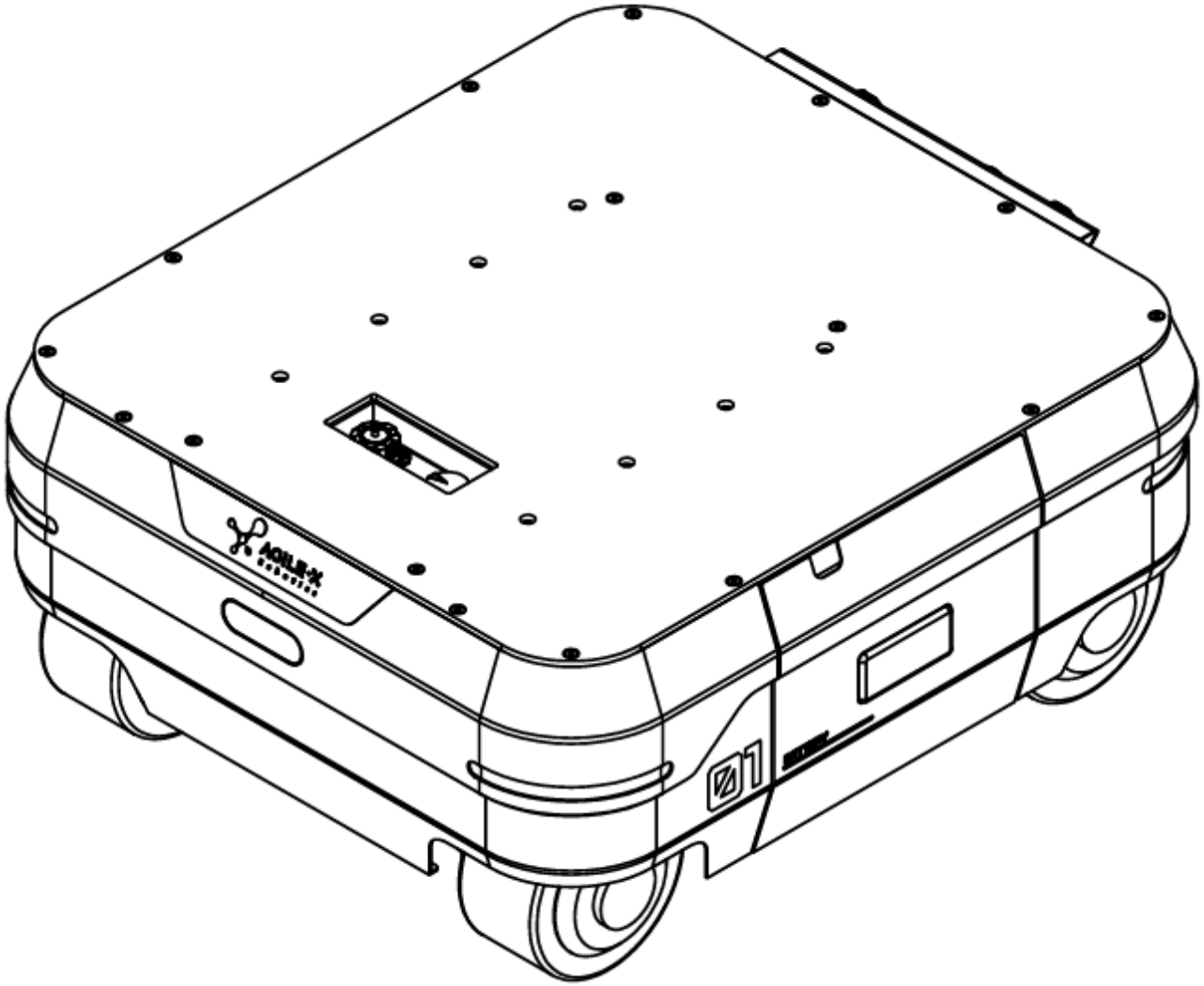

RANGER AIR

AgileX Robotics Team

User Manual V1.0.0 2026.01

Document Version

No.	Version	Date	Revised by	Corresponding firmware version	Rema

6191Wor

1	V1.0.0	2026/1/25	???		First

Before powering on the robot for the first time, any individual or organization must read and understand this information before using the equipment. If you have any questions related to use, please contact us at support@agilex.ai. You must follow and implement all assembly instructions and guidelines in other chapters of this manual. Pay special attention to text associated with warning signs.

Table of Contents

Document Version1

Important Safety Information1

Validity and Responsibility1

Environment1

Inspection1

Precautions1

Operation Precautions1

Battery Precautions1

Usage Environment Precautions1

Safety Precautions1

1. RANGER AIR Introduction1

1.1 Product List1

1.2 Performance Parameters1

1.3 Development Requirements1

2. Basic Introduction1

2.1 Status Indication1

2.2 Electrical Interface Description1

2.3 Remote Controller Description1

3 Use and Development1

3.1 Use and Operation1

3.2 CAN Interface Protocol1

6191Word

3.3 RANGER AIR ROS User Guide1

3.5 Vehicle Coordinate System Description1

3.6 Firmware Upgrade1

4. Product Dimensions1

Important Safety Information

The information in this manual does not include the design, installation, and operation of a complete robot application, nor does it include all peripheral equipment that may affect the safety of the complete system. The design and use of the complete system must comply with the safety requirements established by standards and regulations in the country where the robot is installed. Integrators and end customers of RANGER AIR are responsible for ensuring compliance with applicable national laws and regulations and ensuring that there are no major hazards in the complete robot application. This includes, but is not limited to, the following:

Validity and Responsibility

- Conduct a risk assessment for the complete robot system
- Connect additional safety devices of other machinery as defined by the risk assessment
- Confirm that the design and installation of peripheral equipment, including software and hardware systems, for the entire robot system are correct
- This robot does not have complete safety functions of a fully autonomous mobile robot, such as automatic collision avoidance, fall prevention, and biological proximity warning, including but not limited to the above description. Integrators and end customers need to conduct safety assessments in accordance with relevant regulations and feasible laws to ensure that the developed robot has no major hazards or safety risks in practical applications
- Collect all documents in the technical file: including risk assessment and this manual
- Be aware of potential safety risks before operating and using the equipment

Environment

- For first use, please read this manual carefully to understand basic operation content and operating specifications

- For remote controller operation, choose a relatively open area; the vehicle itself does not have any automatic obstacle avoidance sensors
- Use in ambient temperatures of -10 ℃ to 40℃
- If the vehicle is not custom-made with a separate IP protection level, its water and dust resistance is IP22

Inspection

- Ensure all devices have sufficient battery power
- Ensure there is no obvious abnormality in the vehicle
- Check whether the battery level of the remote controller is sufficient

Precautions

Operation Precautions

- Ensure the surrounding area is relatively open during operation
- Control by remote controller within line of sight
- The maximum payload of RANGER AIR is 80KG. During use, ensure the effective payload does not exceed 80KG
- When installing external expansions on RANGER AIR, confirm the center-of-mass position of the expansion and ensure it is at the rotation center
- Charge in time when the device reports low battery
- If the device is abnormal, stop using it immediately to avoid secondary injury
- If the device is abnormal, contact relevant technical personnel; do not handle it without authorization
- Use the device according to its IP protection rating in environments that meet the protection requirements
- Do not push the vehicle directly
- The rear expansion power current must not exceed 25A, and total power must not exceed 600w

Battery Precautions

6191Word

- When the RANGER AIR product leaves the factory, the battery is not fully charged. The specific battery voltage and capacity can be displayed by vol and batt on the RANGER AIR remote controller
- Do not recharge only after the battery is completely depleted. Please charge in time when the RANGERMINI remote controller battery is below 15%
- Static storage conditions: the optimal storage temperature is -10℃ to 40℃. When storing the battery unused, it must be charged and discharged approximately once a month, then stored at full voltage. Do not put the battery into fire or heat the battery. Do not store the battery at high temperatures
- Charging: you must use the dedicated lithium battery charger provided with the product. Do not charge the battery below 0℃. Do not use non-original batteries, power supplies, or chargers

Usage Environment Precautions

- The working temperature of RANGER AIR is -10℃ to 40℃. Do not use in environments below -10℃ or above 40℃
- Do not use in environments with corrosive or flammable gases, or near combustible materials
- Do not use near heat-generating bodies such as heaters or large winding resistors
- RANGER AIR water and dust resistance rating is IP22
- Recommended usage altitude does not exceed 1000M
- Recommended day-night temperature difference in the usage environment does not exceed 25℃

Safety Precautions

- If you have questions during use, follow the relevant manual or consult technical personnel
- Before operating the equipment, pay attention to on-site conditions to avoid safety incidents caused by misoperation
- In emergencies, press the emergency stop button to power off the device
- Do not modify the internal structure of the device without technical support and permission
- If the device is abnormal, stop using it immediately to avoid secondary injury
- If the device is abnormal, contact relevant technical personnel; do not handle it without authorization.

RANGER AIR Introduction

RANGER AIR is a programmable omnidirectional UGV (UNMANNED GROUND VEHICLE). It is a chassis using an Ackermann steering design. Compared with a four-wheel differential chassis, RANGER AIR has obvious advantages on ordinary concrete and asphalt roads: not only higher motion speed and payload capacity, but also reduced wear on the structure and tires, with better stability and safety. Compared with previous Ackermann model chassis, RANGER AIR not only reduces turning radius but also supports 0-angle steering. RANGER AIR combines the advantages of differential chassis and Ackermann chassis, suitable for various complex terrains. It can also carry stereo cameras, LiDAR, GPS, IMU, robotic arms, and other equipment, and is used in unmanned inspection, security, scientific research, exploration logistics, and other fields.

1.1 Product List

Name	Quantity
RANGER AIR Robot	×1
Battery Charger (AC 220V)	×1
Aviation Plug Male (4Pin)	×1
FS Remote Controller (Optional)	×1
USB-to-CAN Communication Module	×1

1.2 Performance Parameters

Parameter Type	Item	Specification

6191Wo

Mechanical Parameters	Length×Width×Height (mm)	552×500×250
	Wheelbase (mm)	388
	Front / Rear Track (mm)	338
	Curb Weight (Kg)	50-55kg
	Battery Type	Lithium Iron Phospl
	Battery Specification	24V30AH
	Drive Motor	150W×4
	Steering Motor	50W×4
	Parking Type	Electronic Brake
	Steering Type	Four-wheel Four-ste
	Suspension Type	Rear Swing-arm Susp
	Steering motor reduction ratio	1:51
	Steering motor encoder	Dual encoder
	Drive motor reduction ratio	1:4.428
	Drive motor sensor	Encoder
Performance Parameters	Protection level	IP22
	Maximum speed (km/h)	5.4
	Maximum climbing ability (°)	8 °
	Ground clearance (mm)	39
	Maximum endurance time (h)	6.5 (no-load), 2.5 (full
	Maximum range (km)	45 (no-load), 25 (full-
	Charging time (h)	3
	Operating temperature (℃)	-10~40
	External power supply	25A

6191Wo

Control Parameters	Control mode	Remote controller co Command control m
	Remote controller	2.4G / remote distanc
	Communication interface	CAN

1.3 Development Requirements

RANGER AIR can be optionally equipped with an FS remote controller at factory. Users can control the four-wheel four-steering chassis via the remote controller to complete mode switching, movement, and steering operations. RANGER AIR 2 is equipped with a standard CAN communication interface, through which users can perform secondary development.

2 .Basic Introduction

This section provides a basic introduction to the RANGER AIR mobile robot chassis, so that users and developers can gain a basic understanding of the RANGER AIR chassis. As shown in Figure 2.1 below, it is an overview view of the entire mobile robot chassis.

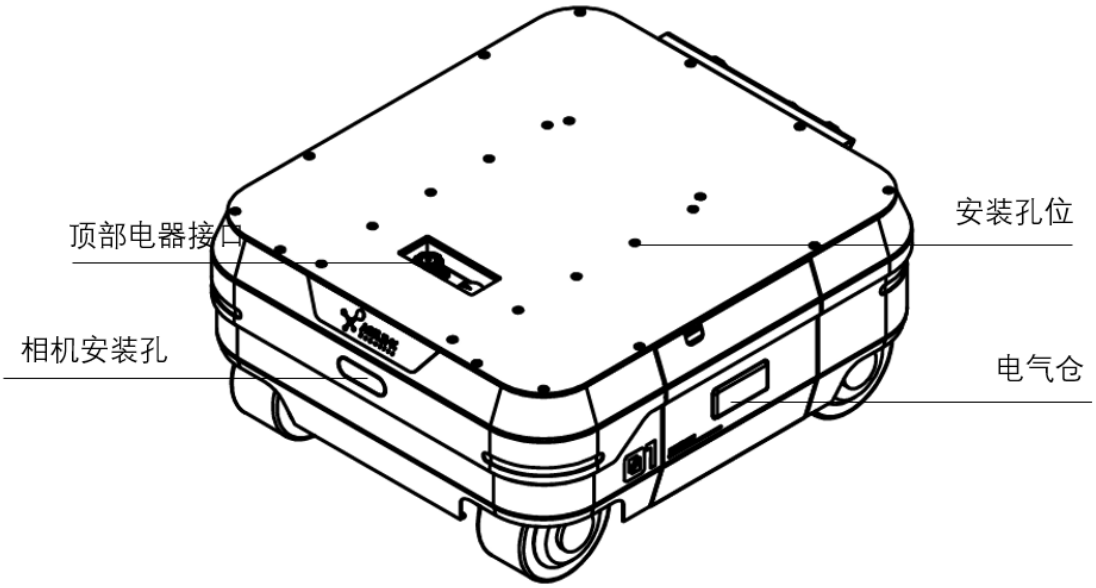

6191Word

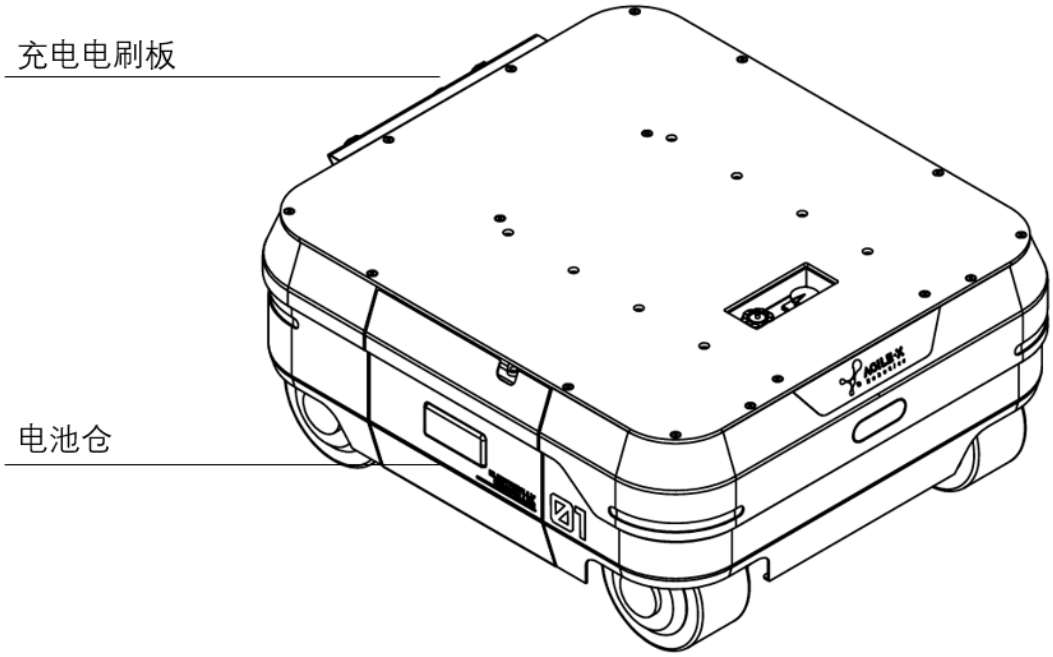

Figure 2.1 Rear overview

RANGER AIR adopts a modular and intelligent overall design concept. In the power module, it uses a composite design of solid tires and swing arms, together with high-power hub motors, which gives the RANGER AIR robot chassis strong passability and ground adaptability, enabling flexible movement on different surfaces. The use of hub motors eliminates complex transmission structures, making RANGER AIR more compact and agile. Open electrical and communication interfaces are provided at the rear and top of RANGER AIR for convenient secondary development by customers. Reserved mounting holes are provided on the top of RANGER AIR for users to mount external expansion devices (for center-of-mass position, refer to Figure 2.2 center-of-mass position diagram).

6191Word

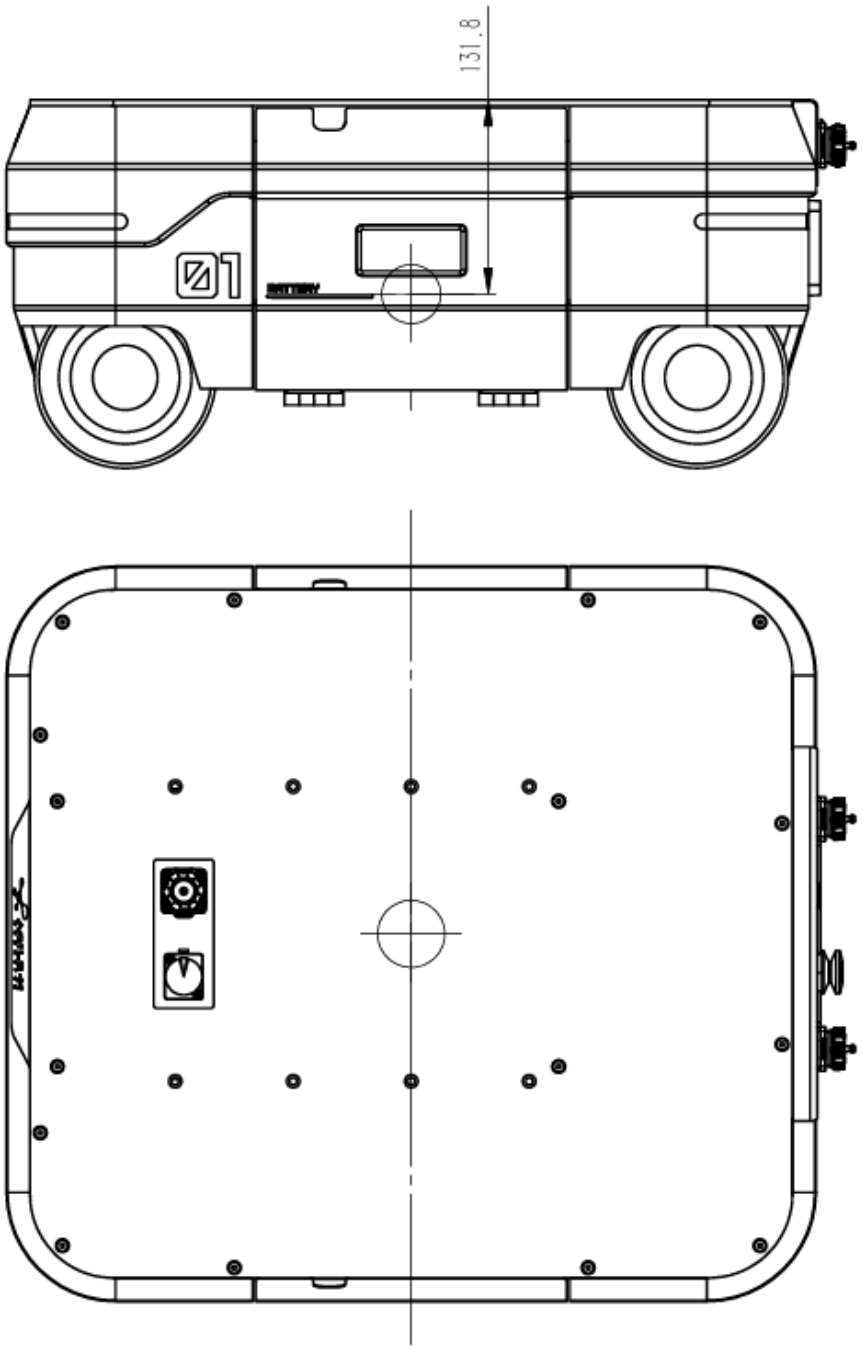

Figure 2.2 RANGERMINI center-of-mass position diagram

2.1 Status Indication

Users can determine the vehicle status via the chassis remote controller display and CAN messages. See Table 2.1 for specific parameters.

Status	Description

6191Wor

Current voltage	Current battery voltage and capacity informa be displayed by vol and batt on the remote co display
Low-voltage alarm	When battery BMS SOC is below 15%, the v prompts by flashing all red lights. When batte SOC is below 10%, to prevent battery damag RANGER AIR chassis will actively cut off ext expansion power supply and driver power su this time, the chassis cannot perform motion accept external command control.
Detailed status information	View via CAN messages

Table 2.1 Vehicle Status Description

Light indicator description:

Light status	Status description
All red lights on steadily	Error occurs
All red lights flashing	Chassis battery warning below 15%
All green breathing lights	Charging current greater than 1A
All yellow lights	Parking
All blue breathing lights	Standby state or straight-line driving
All off	Lights off

The corresponding light effects in motion modes are as follows:

Motion mode	Light display
Straight-line driving	All blue breathing lights
Ackermann mode driving	When turning left, the two left lights show inw outward flowing effect, while the right side sh breathing lights. When turning right, the two r show flowing effect.
Self-rotation mode driving	When rotating left, the four light bars flow to t when rotating right, the four light bars flow to

6191Wo

Oblique mode driving	During left-diagonal oblique movement, the u and lower-right light bars are yellow; during ri diagonal oblique movement, the upper-right a left light bars are yellow.
Lateral mode driving (when oblique angle is 90)	When moving left, the two left light bars are y when moving right, the two right light bars are

2.2. Electrical Interface Description

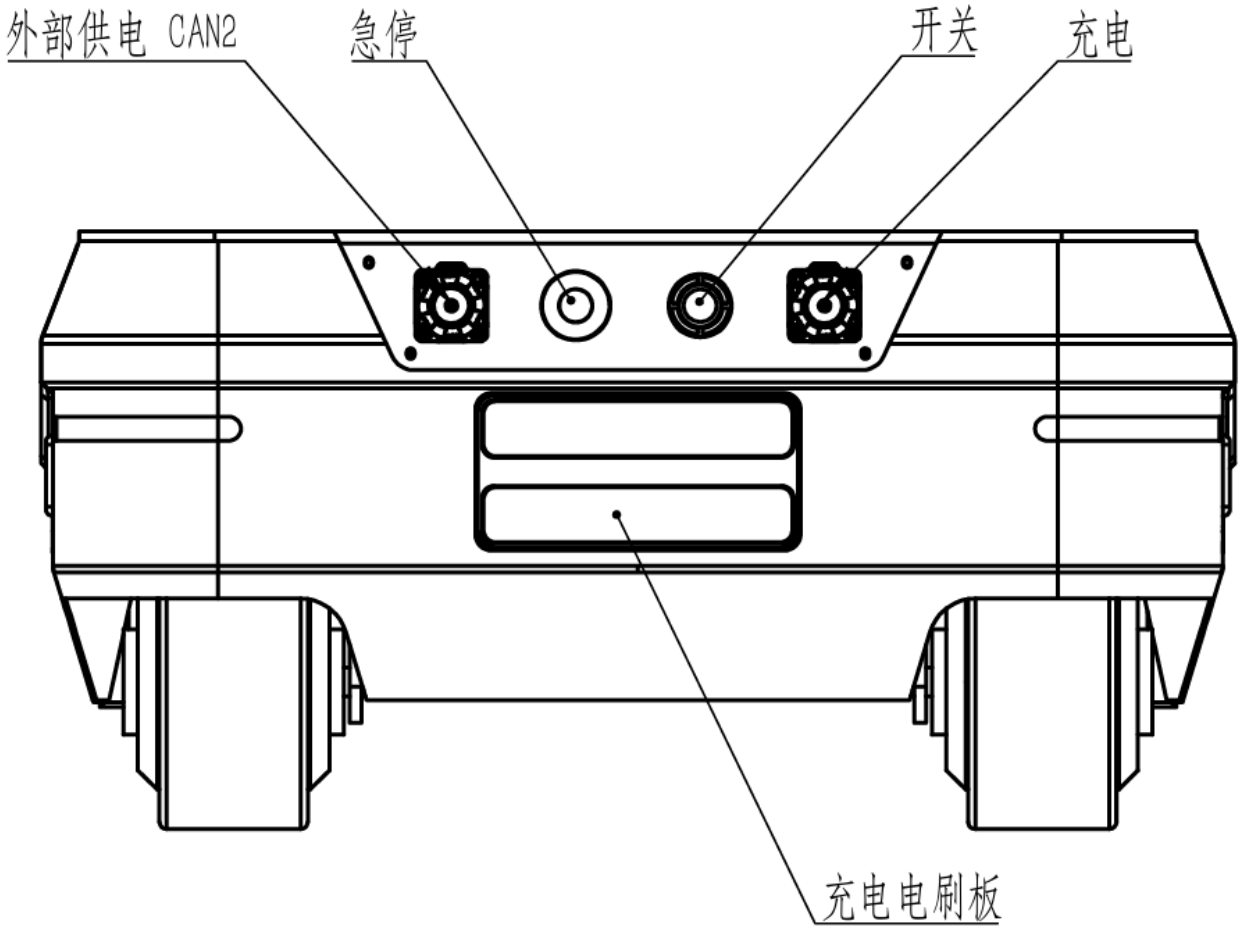

Figure 2.2 Rear view

An aviation expansion interface is configured at the rear of the RANGER AIR chassis, including one power set and one CAN communication interface set. It is convenient for users to provide power and communication for expansion equipment. Specific pin definitions are shown in the figure below. Note that the expansion power here is internally controlled. When battery voltage is lower than safe voltage, power supply will be actively cut off. Therefore, users should pay attention: before reaching the critical voltage, the RANGER AIR chassis platform will notify by flashing lights. Please charge during use.

6191Word

Pin No.	Pin type	Function and definition	Remark
1	Power	VCC	Power positive range 24-29.6 current cannot 25A
2	Power	GND	Power neg
3	CAN	CAN_H	CAN bus l
4	CAN	CAN_L	CAN bus

Figure 2.3 Rear aviation interface pin description

2.3. Remote Controller Description

6191Word



Figure 2.4 Remote controller schematic

As shown above, the key functions are defined as follows: SWB is the control mode selector lever. Toggle to the top for command control mode, and to middle or bottom for remote controller control mode. SWA is the light control switch. Toggle to the bottom to turn off lights (SWB must first enter remote controller mode). SWC toggled to bottom is parking mode, where four-wheel four-steering forms an X lock. SWD is the chassis motion mode setting switch:

SWD toggled up is ① front/rear Ackermann mode and ② self-rotation mode. ① Left joystick controls speed, right joystick controls steering angle; ② Keep left joystick still, and use right joystick left-right direction to control self-rotation;

6191Word

SWD toggled down is oblique mode: left joystick controls speed, right joystick controls steering angle (maximum angle 90° is lateral movement);

Zero-point calibration:

First toggle SWA to the bottom; SWB to the top; SWD to the bottom;

The four directions of the left joystick represent steering motors at four corresponding positions (for example: upper-right means upper-right steering motor, upper-left means upper-left steering motor). Use right joystick left-right to adjust steering angle. The left wheel supports cumulative adjustment in two directions. SWC adjusts sensitivity: DOWN→coarse, MID→medium, UP→fine. Key1 sets the current position as zero point.

Pressing KEY1 in any situation = forcibly clears all chassis errors **Note!! Use only in special situations when safety is ensured**

Note: during zero-point calibration,please do not disconnect vehicle power, otherwise you need to disassemble and recalibrate the vehicle to recover.

POWER is the power button; press and hold to power on.

Basic operation flow for remote controller control:

Before startup, ensure the wheels and chassis of RANGERMINI are parallel and facing directly forward. After normally starting the RANGERMINI mobile robot chassis, power on the remote controller and switch SWB to remote controller control mode. Then the RANGERMINI platform can be controlled by remote controller.

Remote controller battery replacement instructions:

The FS remote controller uses AA batteries as power. When the Remoter level on the display is low, it means the remote controller battery is low. At this time, open the battery cover on the back of the remote controller and replace the batteries.

3 Use and Development

This section mainly introduces the basic operation and use of the RANGER AIR platform, and how to perform secondary development of RANGER AIR through the external CAN port and CAN bus protocol.

3.1 Use and Operation

Inspection

Check the status of RANGER AIR. Check whether there are obvious abnormalities in RANGER AIR; if yes, contact after-sales support. For first use, confirm whether the emergency stop switch on the rear electrical panel is pressed. If pressed, rotate clockwise to release.

Special note: after the emergency stop button is released, in remote controller mode you need to manually press key1 to clear the emergency stop error; in command mode you need to clear the emergency stop error through the error-clearing command.

Startup and Shutdown:

The rear button is the power switch button. Press it to turn on power and power up the vehicle.

Charging:

Check battery voltage. Normal voltage range is 24-29.4V. If the outer ring LED is red, battery voltage is too low; please charge in time. This product is equipped with a 10A charger by default. Insert the charger plug into the charging port at the rear of the chassis, connect charger to power supply, and turn on the switch on the charger to enter charging state.

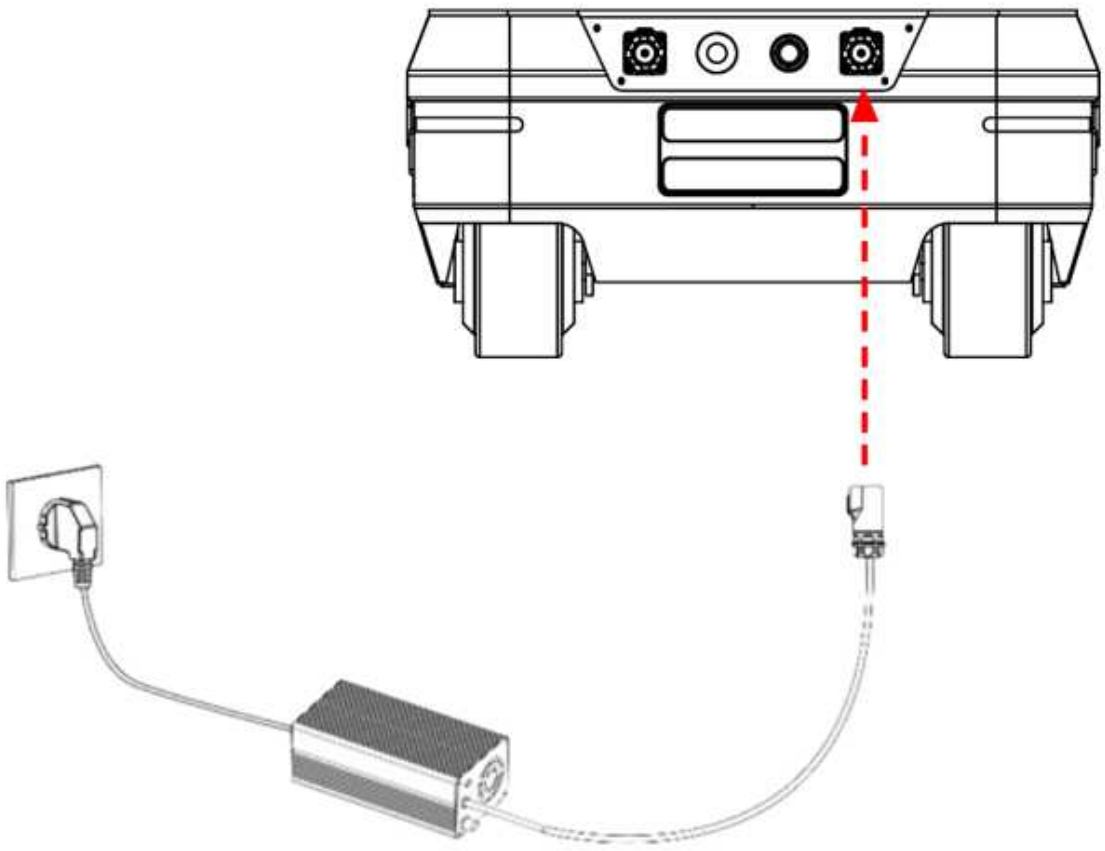

6191Wo**Battery Replacement:**

RANGERMINI is equipped with a 24v30ah battery. During operation, when battery level is low, we can open the right-side battery panelto quickly replace the battery.

Note: before pulling out the battery, you need to move the fixing latch below the battery upward before the battery can be removed.

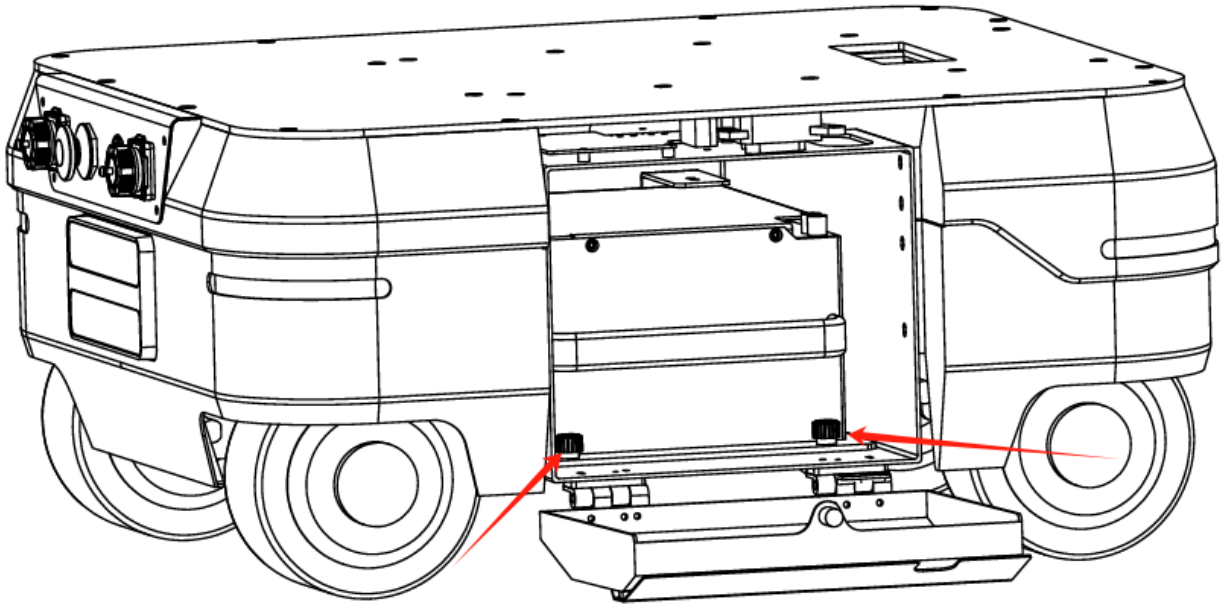

CAN cable connection

One aviation plug male is provided with the four-wheel four-steering chassis shipment. Cable definition is shown below:

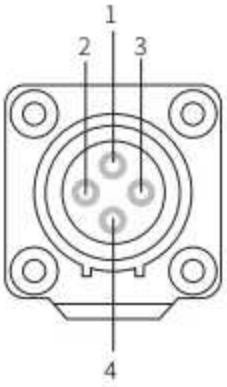

Pin No.	Pin type	Function and definition	Remark

6191Wo

1	Power	VCC	Power positive range 23-26.5V, ma current 1
2	Power	GND	Power neg
3	CAN	CAN_H	CAN bus l
4	CAN	CAN_L	CAN bus

Figure 3.1 Aviation plug schematic

Implementation of CAN command control

After normal startup of the RANGER AIR chassis, the RANGER AIR chassis will receive commands from the CAN interface. At the same time, the host can parse the current chassis status through real-time data fed back by the CAN bus. For specific protocol content, refer to the CAN communication protocol. (Note: the remote controller has first control authority and the highest priority. By default, if the remote controller is not enabled when the chassis is powered on, the chassis is in standby mode.)

3.2 CAN Interface Protocol

The CAN communication standard used in this product is CAN2.0B, with communication baud rate 500K, and message format MOTOROLA format. Through the external CAN bus interface, control model switching, chassis linear speed, and steering angle can be controlled. The chassis will feed back current motion status information in real time (including integrated vehicle motion information and detailed motion information of each wheel), as well as system status information (including self-diagnosis error codes).

Command Name	System Status Feedback Command			
Sending Node	Receiving Node	ID	Period (ms)	Receive ti (ms)
Wire-controlled chassis	Decision control unit	0x211	20ms	None
Data length	0x08			
Position	Function	Data type	Description	

6191Wo

byte [0]	Current vehicle status	unsigned int8	0x00 System normal	
			0x02 System abnormal	
byte [1]	Mode control	unsigned int8	0x00 Standby mode	
			0x01 CAN command control mode	
			0x03 Remote controller mode	
byte [2]	Battery voltage high byte	unsigned int16	Actual voltage X 10 (precision 0.1V)	
byte [3]	Battery voltage low byte			
byte [4]	Fault information highest byte	unsigned int32	See fault information table for details	
byte [5]	Fault information second-highest byte			
byte [6]	Fault information second-lowest byte			
byte [7]	Fault information lowest byte			

Table 1 Fault Information Description

Fault Information Description		
Byte	Bit	Meaning

6191Wor

byte [4]	bit [0]	Reserved, default 0
	bit [1]	Reserved, default 0
	bit [2]	Reserved, default 0
	bit [3]	Reserved, default 0
	bit [4]	Reserved, default 0
	bit [5]	Reserved, default 0
	bit [6]	Reserved, default 0
	bit [7]	Reserved, default 0
byte [5]	bit [0]	Right-front steering zero c status (0: no fault 1: fault)
	bit [1]	Right-rear steering zero c status (0: no fault 1: fault)
	bit [2]	Left-rear steering zero ca status (0: no fault 1: fault)
	bit [3]	Left-front steering zero ca status (0: no fault 1: fault)
	bit [4]	Steering calibration timeo fault 1: fault)
	bit [5]	Reserved, default 0
	bit [6]	Reserved, default 0
	bit [7]	Reserved, default 0

6191Wo

byte [6]	bit [0]	Driver status error (0: no f fault)
	bit [1]	Reserved, default 0
	bit [2]	No.5 motor driver commu fault (0: no fault 1: fault)
	bit [3]	No.6 motor driver commu fault (0: no fault 1: fault)
	bit [4]	No.7 motor driver commu fault (0: no fault 1: fault)
	bit [5]	No.8 motor driver commu fault (0: no fault 1: fault)
	bit [6]	Over-temperature protect fault 1: fault)
	bit [7]	Over-current protection (1: fault)
byte [7]	bit [0]	Battery undervoltage faul fault 1: fault)
	bit [1]	Over-voltage protection (1: fault)
	bit [2]	Remote controller loss pr (0: no fault 1: fault)
	bit [3]	No.1 motor driver commu fault (0: no fault 1: fault)

6191Wo

	bit [4]	No.2 motor driver commu fault (0: no fault 1: fault)
	bit [5]	No.3 motor driver commu fault (0: no fault 1: fault)
	bit [6]	No.4 motor driver commu fault (0: no fault 1: fault)
	bit [7]	Emergency stop (0: norm emergency stop triggered

The motion control feedback frame includes the current vehicle linear velocity and steering angle feedback

Specific protocol content is as follows

Command Name	Motion Control Feedback Command			
Sending Node	Receiving Node	ID	Period (ms)	Receive ti (ms)
Wire-controlled chassis	Decision control unit	0x221	20ms	None
Data length	0x08			
Position	Function	Data type	Description	
byte [0] byte [1]	Speed high byte Speed low byte	signed int16	Actual speed X 1000 (unit 0.001m/s)	
byte [2]	Self-rotation speed high byte	signed int16	Vehicle angular velocity, unit 0.001rad/s	
byte [3]	Self-rotation speed low byte			
byte [4]	Reserved	-	0X00	
byte [5]	Reserved	-	0X00	

6191Wo

byte [6] byte [7]	Steering angle high byte Steering angle low byte	signed int16	Actual inner steering angle X 1000 (unit0.001rad)	

The motion control frame includes linear velocity control command and steering angle control command. Specific protocol content is as follows:

Command Name Control Command				
Sending Node	Receiving Node	ID	Period (ms)	Receive ti (ms)
Decision control unit	Chassis node	0x111	20ms	500ms
Data length	0x08			
Position	Function	Data type	Description	
byte [0] byte [1]	Linear speed high byte Linear speed low byte	signed int16	Vehicle travel speed, unit mm/s (valid value + -1500; when steering angle >20°, valid value + -525; effective in front/rear Ackermann mode and oblique mode)	
byte [2]	Self-rotation speed high byte	signed int16	Vehicle angular velocity, unit 0.001rad/s (valid value +-3259, counterclockwise is positive)	
byte [3]	Self-rotation speed low byte			

6191Wo

byte [4] byte [5]	Reserved	--	--	
byte [6] byte [7]	Steering angle high byte Steering angle low byte	signed int16	Inner steering angle unit: 0.001rad (valid value front/rear Ackermann mode+ -698, oblique mode + -1571) Left turn is positive	

As shown in Figure 3.2.1, when the RANGER AIR chassis is in front/rear Ackermann mode, the feedback steering angle is (α+β)/2, negative for left turn and positive for right turn; feedback speed is the average of four-wheel speeds (i.e., chassis linear speed), negative for reverse and positive for forward. To view detailed angle and speed information of each wheel, refer to feedback frames 0X271 and 0X281.

6191Word

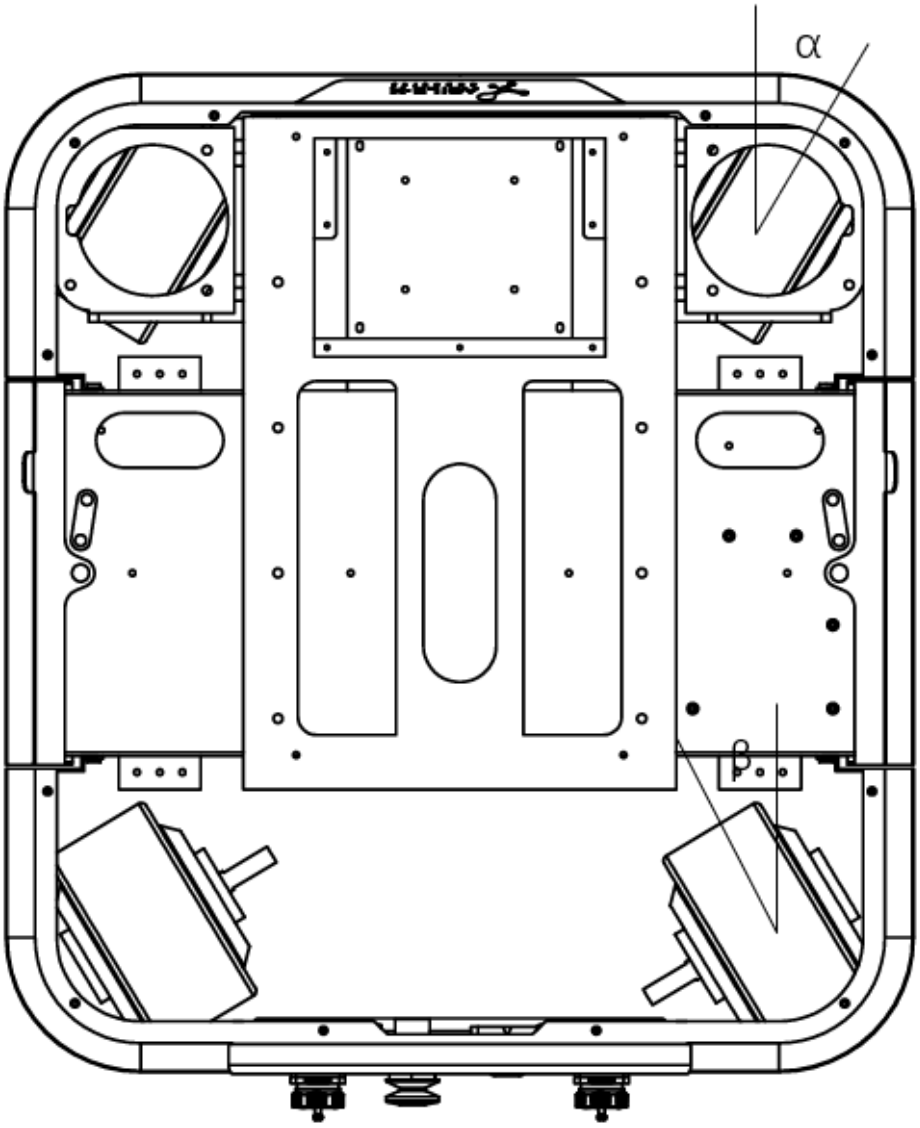

Figure 3.2.1 RANGER AIR Ackermann structure

As shown in Figure 3.2.2, when RANGER AIR is in oblique mode, the feedback steering angle is (α1+α2+α3+α4)/4, negative for right turn and positive for left turn; feedback linear speed is the average of four-wheel speeds, negative for reverse and positive for forward. To view detailed angle and speed information of each wheel, refer to feedback frames 0x271 and 0x281.

6191Word

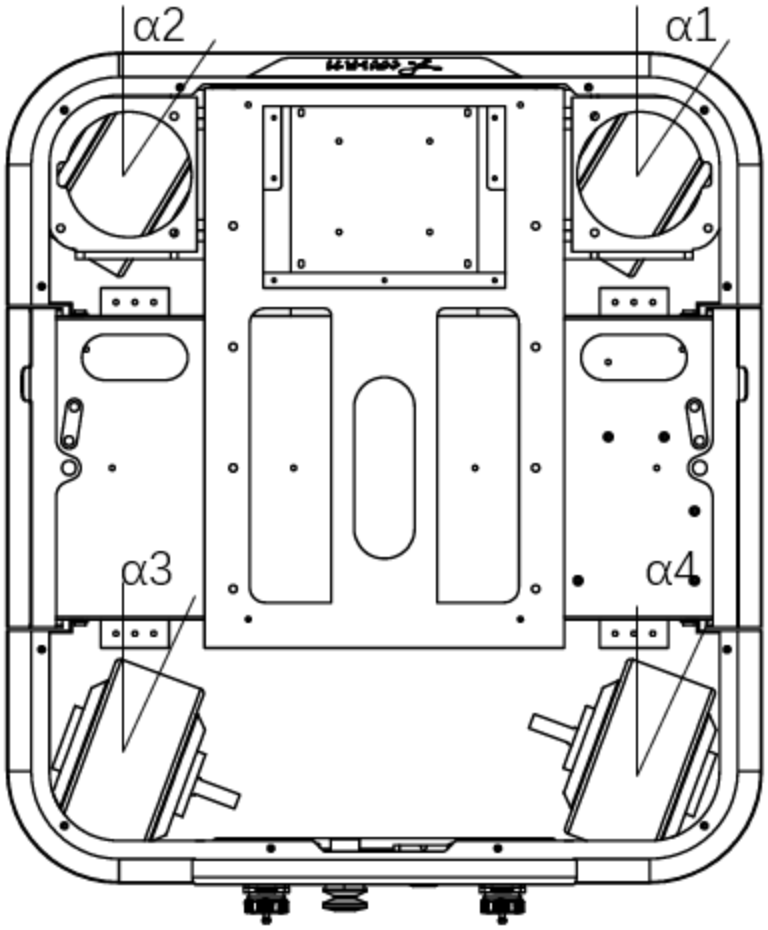

Figure 3.2.2 ranger oblique structure

When the chassis is in self-rotation mode, steering angle is a fixed value and uncontrollable. At this time, steering angle feedback is the average of absolute values of the four actual angles α1, α2, α3, α4. The self-rotation speed of the chassis can be controlled by command. Counterclockwise rotation is positive.

The mode setting frame is used to set the control interface of the terminal. Specific protocol content is as follows.

Command Name Control Command				
Sending Node	Receiving Node	ID	Period (ms)	Receive ti (ms)
Decision control unit	Chassis node	0x421	None	None

6191Wor

Data length	0x01			
Position	Function	Data type	Description	
byte [0]	Control mode	unsigned int8	0x00 Standby mode 0x01 CAN command mode Power-on defaults to standby mode	

Control mode description: when chassis is powered on and remote controller is not connected, control mode defaults to standby. At this time, the chassis only receives control mode commands and does not respond to other commands. To control via CAN, first switch to CAN command mode. If remote controller is turned on, the remote controller has highest authority, can shield command control and switch control mode.

The status set frame is used to clear system errors. Specific protocol content is as follows.

Command Name	Control Command			
Sending Node	Receiving Node	ID	Period (ms)	Receive ti (ms)
Decision control unit	Chassis node	0x441	None	None
Data length	0x01			
Position	Function	Data type	Description	

6191Wo

byte [0]	Error clear command	unsigned int8	0x00 Clear all non-critical faults (including clearing after emergency stop release) 0x01 0x08 correspond to clearing communication faults of motor drivers 1 8 0x09 Clear battery undervoltage fault and attempt to restore drive power 0x0a Clear remote signal loss fault 0x0b 0x0e correspond to clearing steering calibration faults of motor 5 8 0x0f Clear over-current fault 0x10 Clear over-temperature fault	

Example data below is for test only. **You must enable command control mode before use**

1. Vehicle moves forward at 0.15m/S

byte [0]	byte [1]	byte [2]	byte [3]	byte [4]	byte [5]	byte [6]	
0x00	0x96	0x00	0x00	0x00	0x00	0x00	

2. Vehicle steers 10°

byte [0]	byte [1]	byte [2]	byte [3]	byte [4]	byte [5]	byte [6]	
0x00	0x00	0x00	0x00	0x00	0x00	0x03	

In addition to chassis status feedback, the chassis also feeds back four-wheel steering angle and speed, motor current information, encoder, and temperature information.

Specific protocol content is as follows:

6191Word

PS: In the chassis, the eight motor numbers correspond to: right-front wheel No.1, right-rear wheel No.2, left-rear wheel No.3, left-front wheel No.4, right-front steering No.5, right-rear steering No.6, left-rear steering No.7, left-front steering No.8.

Motor speed/current/position information feedback

Command Name	Motor Driver High-speed Information Feedback Frame			
Sending Node	Receiving Node	ID	Period (ms)	Receive ti (ms)
Wire-controlled chassis	Decision control unit	0x251~0x258	20ms	None
Data length	0x08			
Position	Function	Data type	Description	
byte [0] byte [1]	Motor speed high byte Motor speed low byte	signed int16	Current motor speed, unit RPM	
byte [2] byte [3]	Motor current high byte Motor current low byte	signed int16	Current motor current, unit 0.1A	
byte [4] byte [5] byte [6] byte [7]	Position highest byte Position second-highest byte Position second-lowest byte Position lowest byte	signed int32	Current motor position, unit: pulse count	

Motor temperature/voltage/status feedback

6191Word

Command Name Motor Driver Low-speed Information Feedback Frame				
Sending Node	Receiving Node	ID	Period (ms)	Receive ti (ms)
Wire-controlled chassis	Decision control unit	0x261~0x268	100ms	None
Data length	0x08			
Position	Function	Data type	Description	
byte [0]	Driver voltage high byte	unsigned int16	Current driver voltage, unit 0.1V	
byte [1]	Driver voltage low byte			
byte [2]	Driver temperature high byte	signed int16	Unit 1℃	
byte [3]	Driver temperature low byte			
byte [4]	Motor temperature	signed int8	Unit 1℃ (invalid value for RANGM series, can be ignored)	
byte [5]	Driver status	unsigned int8	See Table 2 for details	
byte [6]	Reserved	-	0X00	
byte [7]	Reserved	-	0X00	

Table 2 Driver Status

Byte	Bit	Meaning
byte[5]	bit[0]	Whether power supply v too low□0: normal 1: to

6191Wor

	bit[1]	Whether motor is over-te 0: normal 1: over-tempe
	bit[2]	Whether driver is over-cu normal 1: over-curre
	bit[3]	Whether driver is over-te 0: normal 1: over-temp
	bit[4]	Sensor status (0: nor abnormal)
	bit[5]	Driver error status0: n error
	bit[6]	Driver enable status1: e disabled
	bit[7]	Reserved

Four-wheel steering angle feedback

Command Name	Four-wheel Steering Angle Information Feedback Frame			
Sending Node	Receiving Node	ID	Period (ms)	Receive ti (ms)
Wire-controlled chassis	Decision control unit	0x271	20ms	None
Data length	0x08			
Position	Function	Data type	Description	
byte [0] byte [1]	No.5 steering angle high byte No.5 steering angle low byte	signed int16	Current angle unit 0.001rad	

6191Wo

byte [2] byte [3]	No.6 steering angle high byte No.6 steering angle low byte	signed int16	Current angle unit 0.001rad	
byte [4] byte [5]	No.7 steering angle high byte No.7 steering angle low byte	signed int16	Current angle unit 0.001rad	
byte [6] byte [7]	No.8 steering angle high byte No.8 steering angle low byte	signed int16	Current angle unit 0.001rad	

Four-wheel speed feedback

Command Name	Four-wheel Speed Information Feedback Frame			
Sending Node	Receiving Node	ID	Period (ms)	Receive ti (ms)
Wire-controlled chassis	Decision control unit	0x281	20ms	None
Data length	0x08			
Position	Function	Data type	Description	
byte [0] byte [1]	No.1 wheel speed high byte No.1 wheel speed low byte	signed int16	Current speed unit mm/s	
byte [2] byte [3]	No.2 wheel speed high byte No.2 wheel speed low byte	signed int16	Current speed unit mm/s	

6191Wo

byte [4] byte [5]	No.3 wheel speed high byte No.3 wheel speed low byte	signed int16	Current speed unit mm/s	
byte [6] byte [7]	No.4 wheel speed high byte No.4 wheel speed low byte	signed int16	Current speed unit mm/s	

The motion model switching command is used to switch the chassis motion model. Specific protocol content is as follows

Command Name	Current Motion Mode Feedback Command			
Sending Node	Receiving Node	ID	Period (ms)	Receive ti (ms)
Wire-controlled chassis	Decision control unit	0x291	20ms	None
Data length	0x03			
Position	Function	Data type	Description	
byte [0]	Current chassis motion mode	unsigned int8	0x00 front/rear Ackermann mode 0x01 oblique mode 0x02 self-rotation mode 0x03 parking mode	
byte [1]	Whether in motion model switching process	unsigned int8	0x00 switch completed 0x01 switching motion model Speed control commands are not responded during switching	

6191Wor

byte [2]	Current drive mode feedback	unsigned int8	0×00 current drive mode 0×01 voltage drive mode	

The motion model switching command is used to switch the chassis motion model. Specific protocol content is as follows

Command Name Control Command				
Sending Node	Receiving Node	ID	Period (ms)	Receive ti (ms)
Decision control unit	Chassis node	0x141	None	None
Data length	0x01			
Position	Function	Data type	Description	
byte [0]	Motion mode	unsigned int8	0x00 front/rear Ackermann mode (default on power-up) 0x01 oblique mode 0x02 self-rotation mode 0x03 parking mode	

Light control command is as follows

Command Name	Light Control Frame			
Sending Node	Receiving Node	ID	Period (ms)	Receive ti (ms)
Decision control unit	Wire-controlled chassis	0x121	20ms	500ms
Data length	0x08			
Position	Function	Data type	Description	

6191Wo

byte [0]	Light control enable flag	unsigned int8	0x00 control command invalid 0x01 light control enabled	
byte [1]	Light mode	unsigned int8	0x00 always off 0x01 always on	
byte [2]	Reserved	_ _	0x00	
byte [3]	Reserved	_ _	0x00	
byte [4]	Reserved	_ _	0x00	
byte [5]	Reserved	_ _	0x00	
byte [6]	Reserved	_ _	0x00	
byte [7]	Reserved	_ _	0x00	

Light control command feedback frame is as follows

Command Name	Light Control Feedback Frame			
Sending Node	Receiving Node	ID	Period (ms)	Receive ti (ms)
Wire-controlled chassis	Decision control unit	0x231	20ms	None
Data length	0x08			
Position	Function	Data type	Description	
byte [0]	Current light control enable flag	unsigned int8	0x00 control command invalid 0x01 light control enabled	
byte [1]	Current light mode	unsigned int8	0x00 always off 0x01 always on	
byte [2]	Reserved	unsigned int8	0x00	
byte [3]	Reserved	_ _	0x00	

6191Wo

byte [4]	Reserved	_ _	0x00	
byte [5]	Reserved	_ _	0x00	
byte [6]	Reserved	_ _	0x00	
byte [7]	Count check (count)	unsigned int8	0~255 cyclic count, increments once per sent command	

Odometry information feedback frame is as follows

Front wheels

Command name	Front wheel odometry feedback			
Sending node	Receiving node	id	Period (ms)	Receive ti (ms)
Wire-controlled chassis	Decision control unit	0×311	20ms	None
Data length	0×08			
Byte	Description	Data type	Description	
byte [0] byte [1] byte [2] byte [3]	Front left wheel odometer highest byte Front left wheel odometer second-highest byte Front left wheel odometer second-lowest byte Front left wheel odometer lowest byte	signed int32	Chassis left wheel odometer feedback, unit: mm	

6191Wo

byte [4] byte [5] byte [6] byte [7]	Front right wheel odometer highest byte Front right wheel odometer second-highest byte Front right wheel odometer second-lowest byte Front right wheel odometer lowest byte	signed int32	Chassis right wheel odometer feedback, unit: mm	

Rear wheels

Command name	Rear wheel odometry feedback			
Sending node	Receiving node	id	Period (ms)	Receive ti (ms)
Wire-controlled chassis	Decision control unit	0×312	20ms	None
Data length	0×08			
Byte	Description	Data type	Description	
byte [0] byte [1] byte [2] byte [3]	Rear left wheel odometer highest byte Rear left wheel odometer second-highest byte Rear left wheel odometer second-lowest byte Rear left wheel odometer lowest byte	signed int32	Chassis left wheel odometer feedback, unit: mm	

6191Wo

byte [4] byte [5] byte [6] byte [7]	Rear right wheel odometer highest byte Rear right wheel odometer second-highest byte Rear right wheel odometer second-lowest byte Rear right wheel odometer lowest byte	signed int32	Chassis right wheel odometer feedback, unit: mm	

Remote controller information feedback frame is shown in the table below

Command Name Remote Controller Information Feedback				
Sending Node	Receiving Node	ID	Period (ms)	Receive ti (ms)
Wire-controlled chassis	Decision control unit	0x241	20ms	None
Data length	0x08			
Position	Function	Data type	Description	

6191Wo

byte [0]	Remote SW feedback	unsigned int8	bit[0-1]: SWA: 2-upper position 3-lower position bit[2-3]: SWB: 2-upper position 1-middle position 3-lower position bit[4-5]: SWC: 2-upper position 1-middle position 3-lower position bit[6-7]: SWD: 2-upper position 3-lower position	
byte [1]	Right stick left-right	unsigned int8	Range: [-100,100]	
byte [2]	Right stick up-down	unsigned int8	Range: [-100,100]	
byte [3]	Left stick up-down	unsigned int8	Range: [-100,100]	
byte [4]	Left stick left-right	unsigned int8	Range: [-100,100]	
byte [5]	Left knob VRA	unsigned int8	Range: [-100,100]	
byte [6]	Reserved	--	0x00	
byte [7]	Count check	unsigned int8	0-255 cyclic count	

Total battery BMS data feedback, specific protocol content is as follows

Command Name BMS Data Feedback				
Sending Node	Receiving Node	ID	Period (ms)	Receive ti (ms)
Wire-controlled chassis	Decision control unit	0x361	500ms	None
Data length	0x08			
Position	Function	Data type	Description	

6191Wor

byte [0]	Battery SOC	unsigned int8	Range 0~100	
byte [1]	Battery SOH	unsigned int8	Range 0~100	
byte [2] byte [3]	Battery voltage high byte Battery voltage low byte	unsigned int16	Unit:0.1V	
byte [4] byte [5]	Battery current high byte Battery current low byte	signed int16	Unit:0.1A	
byte [6] byte [7]	Battery temperature high byte Battery temperature low byte	signed int16	Unit:0.1℃	

Command Name BMS Data Feedback				
Sending Node	Receiving Node	ID	Period (ms)f	Receive ti (ms)
Wire-controlled chassis	Decision control unit	0x362	500ms	None
Data length	0x04			
Position	Function	Data type	Description	
byte [0]	Alarm Status 1	unsigned int8	BIT1: over-voltage BIT2: under-voltage BIT3: high temperature BIT4: low temperature BIT7: discharge over-current	
byte [1]	Alarm Status 2	unsigned int8	BIT0: charge over-current	

6191Wo

byte [2]	Warning Status 1	unsigned int8	BIT1: over-voltage BIT2: under-voltage BIT3: high temperature BIT4: low temperature BIT7: discharge over-current	
byte [3]	Warning Status 2	unsigned int8	BIT0: charge over-current	

3.3 RANGER AIR ROS User Guide

ROS provides some standard operating system services, such as hardware abstraction, low-level device control, common function implementation, inter-process messaging, and package management. ROS is based on a graph architecture so that processes of different nodes can receive, publish, and aggregate various types of information (such as sensing, control, status, planning, etc.). Currently ROS mainly supports UBUNTU.

Development Preparation

Hardware Preparation

- CANlight CAN communication module X1
- Laptop computer X1
- AGILEX RANGER mobile robot chassis X1
- AGILEX RANGER matching remote controller FS-i6s X1
- AGILEX RANGER top aviation socket X1

Example environment description

- Ubuntu 20.04
- ROS noetic
- Git

Hardware Connection and Preparation

- Route out CAN cable from top aviation plug or rear plug, and connect CAN_H and CAN_L in the CAN cable to CAN_TO_USB adapter respectively;
- Turn on the mobile robot chassis knob switch and check whether emergency stop switches on both sides are released;

6191Word

- Connect CAN_TO_USB to laptop USB port. Connection schematic is shown in Figure 3.4.

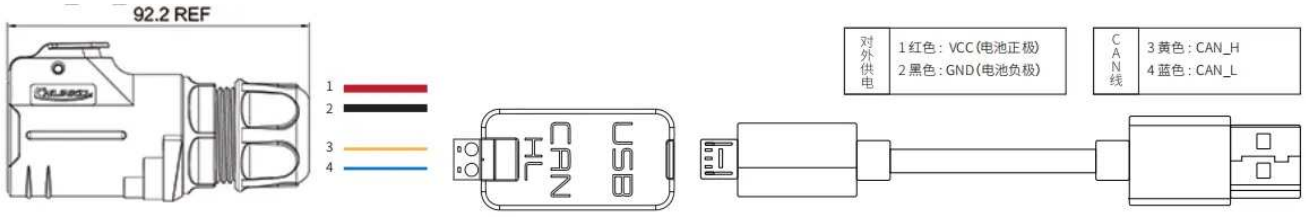

Figure 3.4 CAN cable connection schematic

ROS Installation and Environment Setup: for installation details refer to:http://wiki.ros.org/kinetic/Installation/Ubuntu <http://wiki.ros.org/kinetic/Installation/Ubuntu>

Test CANABLE hardware and CAN communication:

Enable gs_usb kernel module

Set 500k baud rate and enable can-to-usb adapter

If no errors occur in previous steps, you should be able to immediately view CAN device using the command

Install and use can-utils to test hardware

If can-to-usb is connected to the robot and the vehicle is powered on, use the following command to monitor data from the chassis

References:

[1] https://github.com/agilexrobotics <https://github.com/agilexrobotics>

[2]https://wiki.rdu.im/_pages/Notes/Embedded-System/Linux/can-bus-in-linux.html <https://wiki.rdu.im/_pages/Notes/Embedded-System/Linux/can-bus-in-linux.html>

AGILEX RANGER ROS PACKAGE download and compilation:

- Install ros dependency packages

- Clone and compile hunter_ros source code

Reference:https://github.com/agilexrobotics/ranger_ros/tree/air_delta <https://github.com/agilexrobotics/ranger_ros/tree/air_delta>

Start ROS nodes:

1. Start chassis node

Before startup, you need to enable the usb_to_can module provided by AgileX. The enabling command is: rosrun ranger_bringup bringup_can2usb.bash. This command only needs to be executed once each time the powered usb_to_can module is used.

1. Start keyboard node

Pay attention to terminal output and control ranger movement with specified keys

3.5 Vehicle Coordinate System Description

Using the center of the vehicle body as coordinate origin: forward is positive x-axis, left is positive y-axis, and upward is positive z-axis

3.6 Firmware Upgrade

To facilitate users to upgrade firmware versions used by the chassis, RANGER AIR chassis provides a hardware interface for firmware upgrade and corresponding client software. Its client interface is shown below.

Upgrade Preparation

AgileX USB TO CAN module X 1

micro USB cable X 1

RANGER AIR chassis X 1

Computer (WINDOWS operating system) X 1

Upgrade Process

1Plug USBTOCAN module into computer, then open AgxTEST software (order is important. If software is opened first and module plugged in later, the device may not be recognized)

Download link:

Link:https://pan.baidu.com/s/1-UFFui_GEG_S7Q9nYonQNg?pwd=h7vb <https://pan.baidu.com/s/1-UFFui_GEG_S7Q9nYonQNg?pwd=h7vb>

Extraction code: h7vb

2. Click Open Serial button, then press vehicle power button. If connection is successful, version information of main controller will be recognized, as shown below

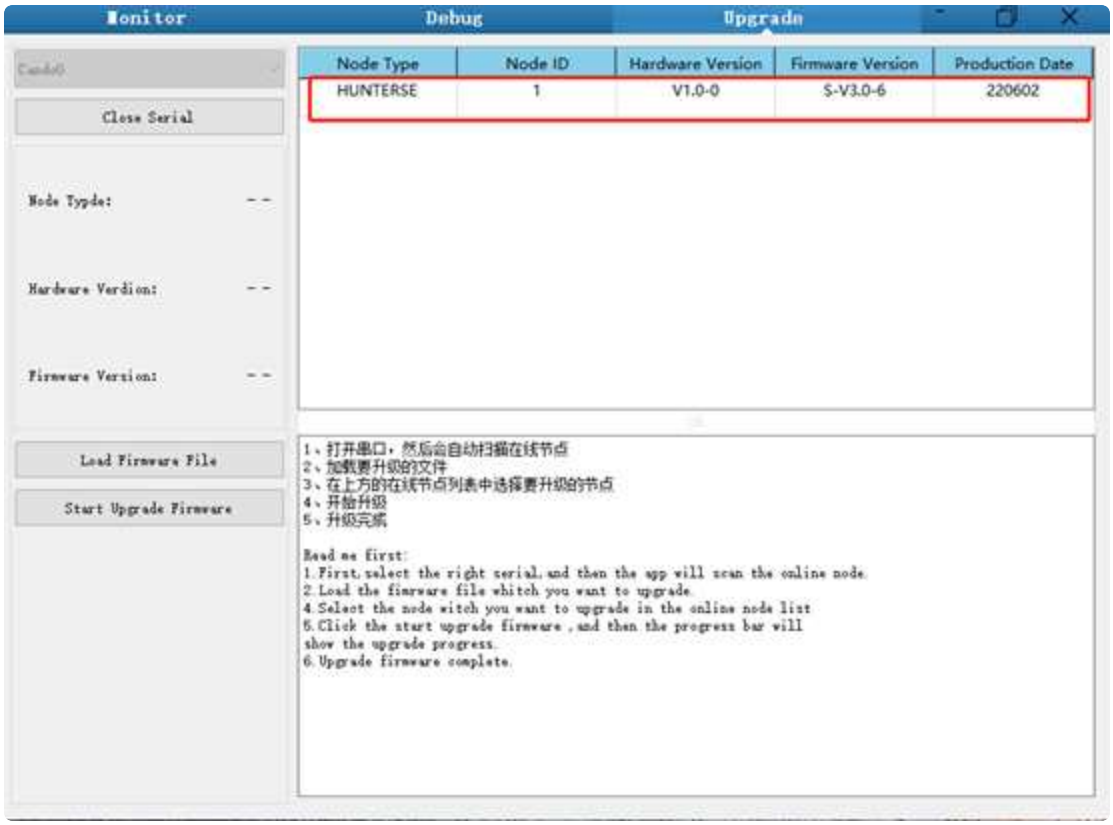

3. Click Load Firmware File button to load firmware to be upgraded. After successful loading, firmware information will be obtained, as shown below

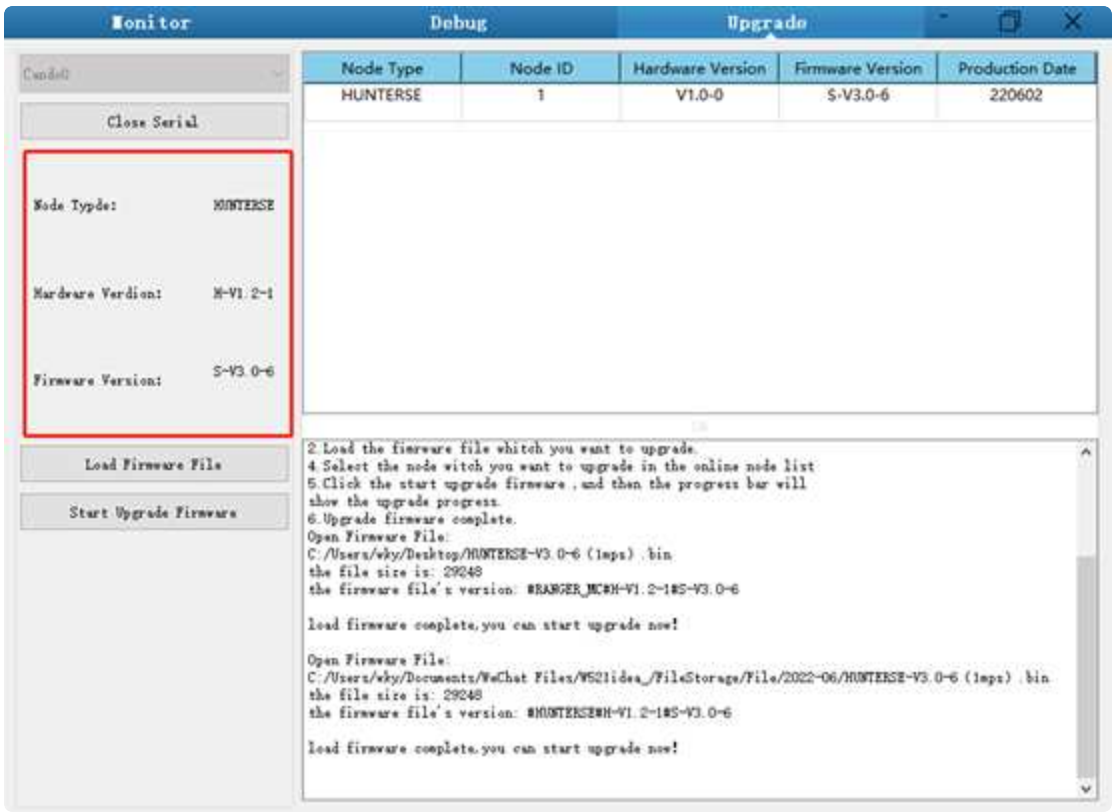

4. Click node to be upgraded in node list box, then click Start Upgrade Firmware to start firmware upgrade. A pop-up prompt appears after successful upgrade.

6191Word

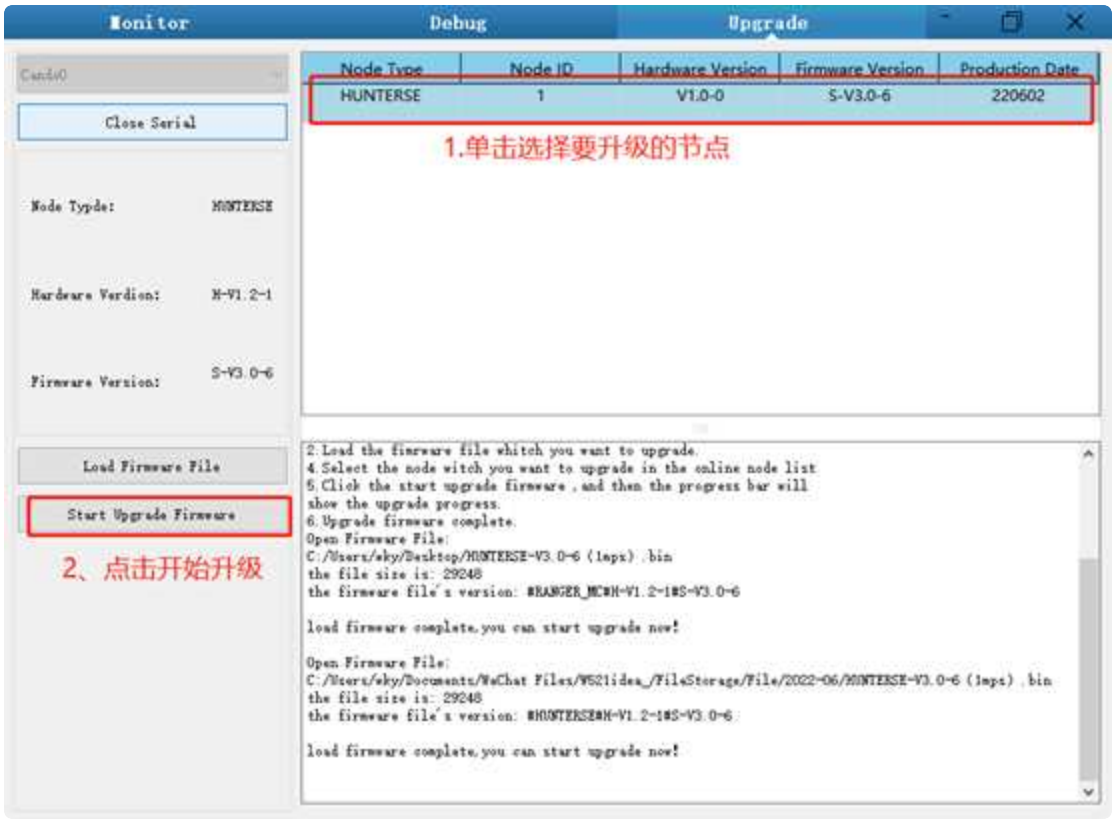

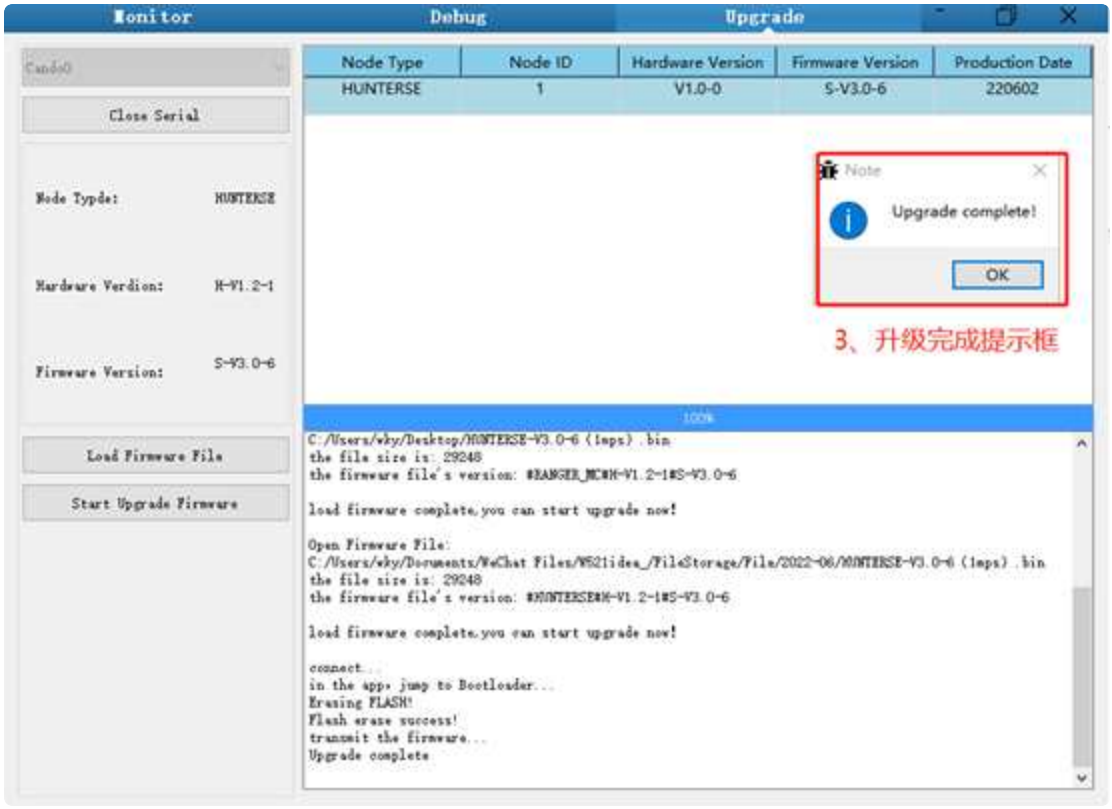

4. Product Dimensions

RANGER DELTA product dimensions

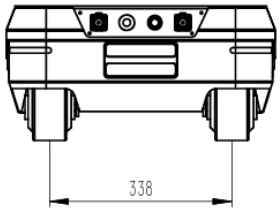

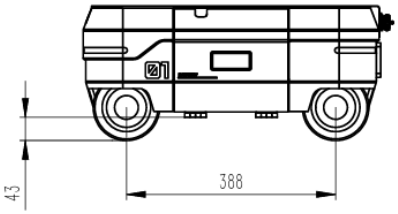

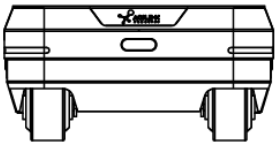

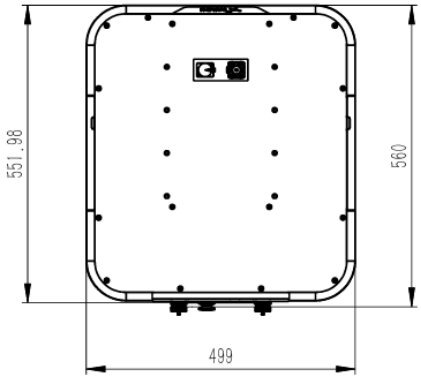

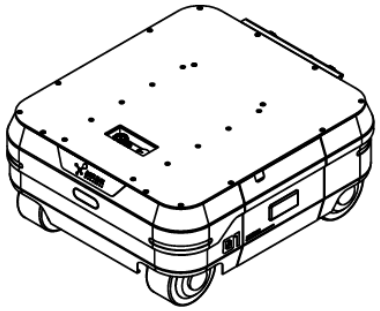

Mounting hole dimension drawing

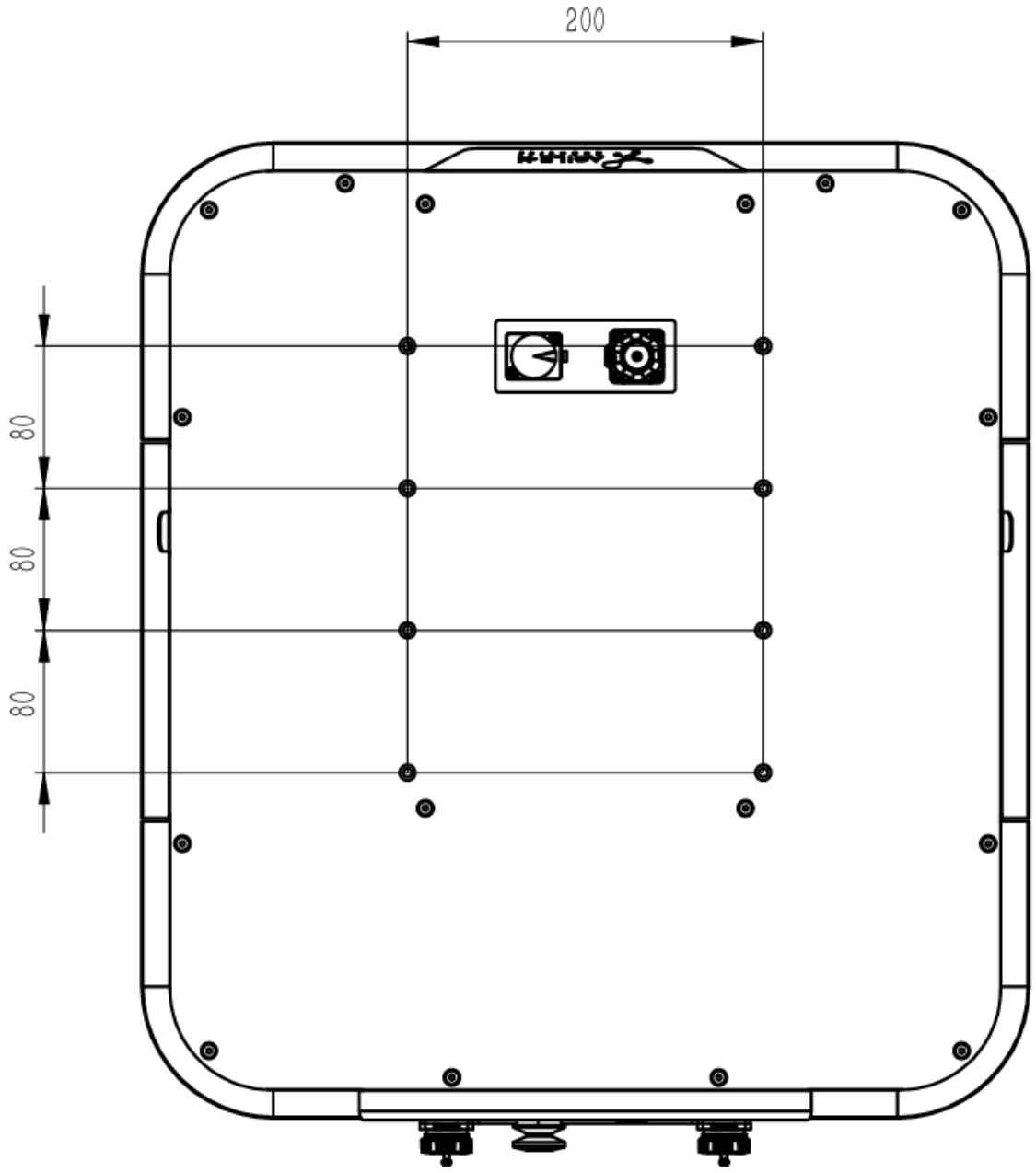

AGILE·X
松灵机器人（东莞）有限公司
WWW.AGILEX.AI
TEL:+86-0769-22892150
MOBILE:+86-19925374409